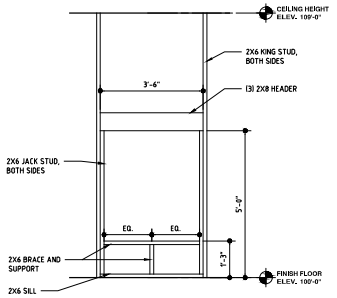

4 Future Fireplace Framing
SCALE: 1/2" = 1'

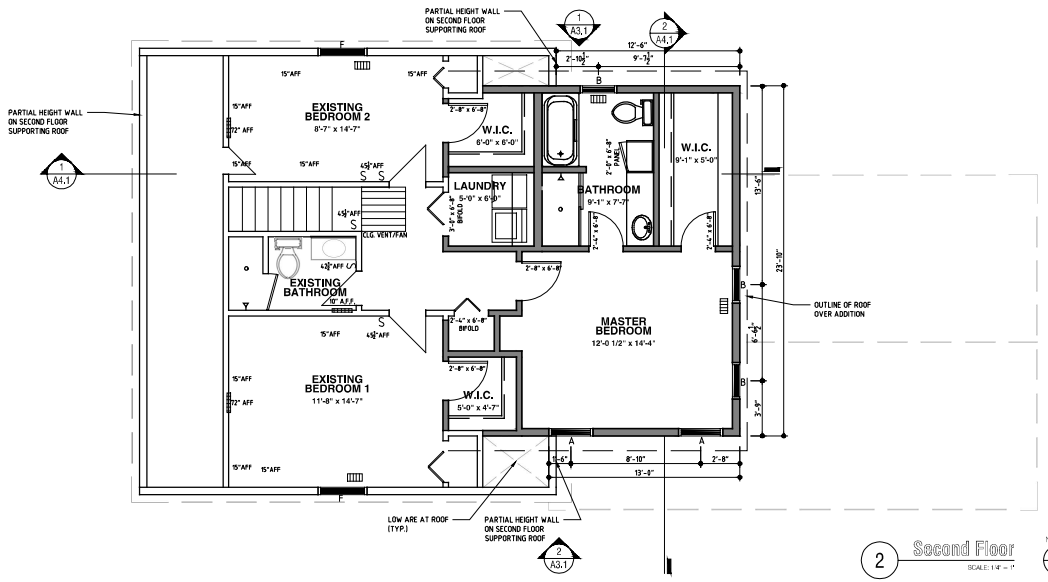

2 Second Floor
SCALE: 1/4" = 1'

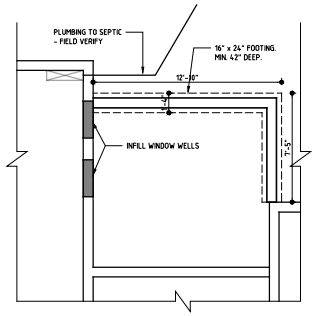

3 Basement
SCALE: 1/4" = 1'

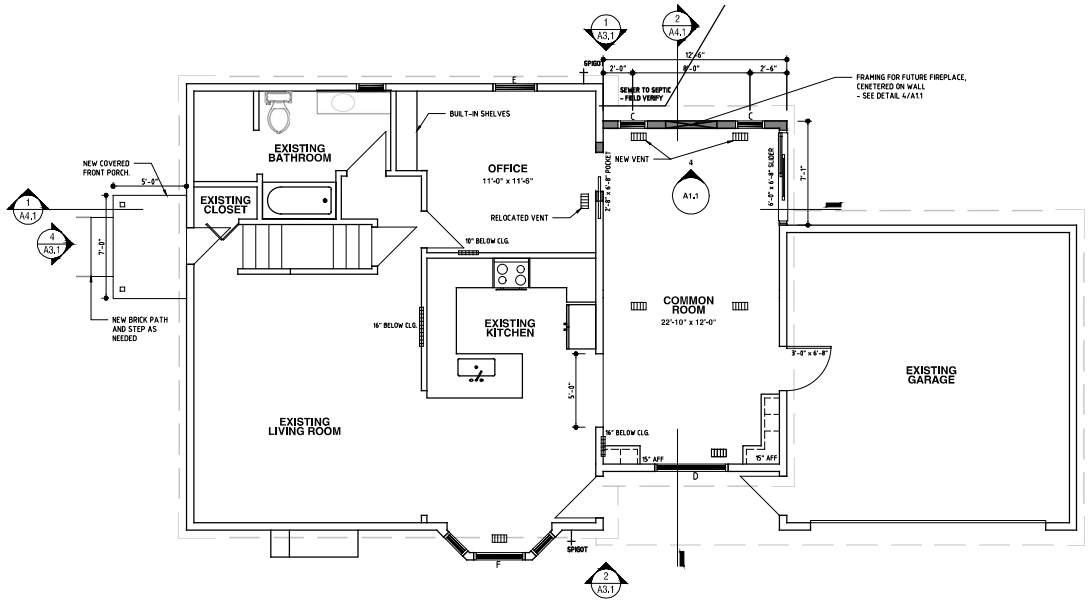

1 First Floor
SCALE: 1/4" = 1'

Square Footages	
EXISTING FIRST FLOOR	949 SQ.FT.
EXISTING SECOND FLOOR	494 SQ.FT.
FIRST FLOOR ADDITION	149 SQ.FT.
SECOND FLOOR ADDITION	387 SQ.FT.
TOTAL	1,979 SQ. FT.

Window Legend

MARK	SIZE	TYPE	REMARKS
A	3050	DOUBLE HUNG	
B	2640	DOUBLE HUNG	
C	2040	DOUBLE HUNG	
D	5056	DOUBLE HUNG	
E	3040	DOUBLE HUNG	
F			EXISTING

NOTE - 2640 = 26"x40"

General Notes

1. ALL EXTERIOR WALLS TO BE 2X6 WD STUD @ 16" O.C. @ 9'-0" IN HEIGHT U.N.O.
2. HEADER HEIGHT OF ALL DOORS AND WINDOW TO BE 6'-8" A.F.F. U.N.O.
3. ALL BEARING WALLS SHALL HAVE FLOOR JOISTS UNDER EACH BEARING STUD, (TYP OF ALL BEARING WALLS)
4. ALL BEARING ENDS OF HEADERS, GIRDERS, AND POINT LOADS SHALL HAVE MIN (3)2X MEMBERS FOR BEARING, 2X MEMBERS SHALL BE RELATED TO WALL SIZE.
5. FIRST FLOOR FRAMING SUPPORTING ELEMENTS HAVE BEEN DESIGNED FOR:
DEAD LOAD = 10 PSF
LIVE LOAD = 40 PSF
6. ATTIC FLOOR FRAMING SUPPORTING ELEMENTS HAVE BEEN DESIGNED FOR:
DEAD LOAD = 10 PSF
LIVE LOAD = 40 PSF
7. ALL HEADERS IN BEARING WALLS SHALL BE MINIMUM OF 2X12 HEM FIR #2 OR BETTER. PROVIDE MIN (2) 2X4 OR 2X6 DEPENDING ON WALL THICKNESS SPF STUD GRADE OR BETTER UNDER EACH END OF ALL HEADERS AND BEAMS U.N.O.
8. JOIST LAYOUT IS ONLY FOR GUIDANCE AND SHALL NOT BE USED AS SHOP DRAWINGS. SUPPLIER TO ENSURE THE UNOBSTRUCTED OF PLUMBING AND HVAC OPENING AND HEADER CLEARANCE.
9. ALL STEEL BEAMS MUST DIRECTLY BEAR ON STEEL COLUMNS.
10. PROVIDE DOUBLE RIM JOIST ABOVE ALL OPENINGS IN FOUNDATION WALL.
11. ALL MULTI JACK STUDS TO BE GLUED AND NAILED WITH 2 ROWS OF 12D NAILS @ 12" O.C.
12. SPACING OF JOISTS UNDER ALL TILE FINISHES SHALL NOT BE MORE THAN 16" O.C.
13. PROVIDE DOUBLE JOISTS UNDER ALL PARTITION WALLS PARALLEL TO JOIST DIRECTION.
14. PROVIDE SOLID BLOCKING PER MANUFACTURER
15. ALL GLASS SHOWER AND BATHTUB DOORS AND ENCLOSURES TO BE TEMPERED GLAZING
16. EXISTING CEILING HEIGHTS ARE 8'-0", NEW CEILING HEIGHTS TO MATCH EXISTING, U.N.O.

MI Building Code Notes

1. EACH BEDROOM TO HAVE A MIN WINDOW OPENING OF 5.7 SQ.FT. WITH A MIN WIDTH OF 20" AND A SILL LESS THAN 44" ABOVE FINISHED FLOOR.
2. ALL WINDOWS WITHIN 18" OF THE FLOOR AND WITHIN 12" OF ANY DOORS ARE TO HAVE SAFETY TEMPERED GLAZING
3. ALL EXTERIOR WINDOWS ARE TO BE DOUBLE GLAZED AND ALL EXTERIOR DOORS ARE TO BE SOLID CORE WITH WEATHER STRIPPING. PROVIDE DEADBOLT LOCKS ON ALL EXTERIOR DOORS AND LOCKING DEVICES ON ALL DOOR AND WINDOWS
4. CONNECT ALL SMOKE DETECTORS (SEE PLANS FOR LOCATIONS) TO HOUSE ELECTRICAL SYSTEM AND INTERCONNECT EACH ONE SO THAT WHEN ANY ONE IS TRIPPED THEY ALL WILL ALARM.
5. PROVIDE COMBUSTION AIR VENTS WITH SCREEN AND BACK DAMPER FOR FIREPLACES, WOOD STOVE, AND ANY APPLIANCE WITH OPEN FLAME.
6. BATHROOMS AND UTILITY ROOMS ARE TO BE VENTED TO OUTSIDE AIR WITH A MIN OF A 90 CFM FAN.
7. RANGE HOODS TO BE VENTED TO OUTSIDE AIR.
8. ENCLOSED ATTIC SPACES OR RAFTER SPACES TO HAVE 1 SQ.FT. OF FREE VENTILATING AREA FOR EVERY 130 SQ.FT. OF AREA WHERE A CEILING IS APPLIED TO THE UNDERSIDE OF ROOF RAFTERS.
9. HANDRAILS SHALL BE 36" IN HEIGHT MEASURED VERTICALLY FROM THE NOSING OF THE TREAD. HANDRAILS SHALL NOT PROJECT MORE THEN 3" INTO THE WIDTH OF THE STAIRS.
10. ALL OPEN SIDES OF STAIRWAYS OR WALKWAYS SHALL HAVE GUARDRAILS. RAISED FLOORS EXCEEDING 18" ABOVE FLOOR OR GRADE SHALL HAVE GUARDRAILS NOT LESS THAN 36" IN HEIGHT. BALUSTERS SHALL BE SPACED SUCH THAT A SPHERE 4" IN DIA CANNOT PASS THROUGH ANY OPENING.
11. STAIRS SHALL HAVE A MIN CLEAR WIDTH OF 36", A MIN TREAD DEPTH OF 10", MIN NOSING DEPTH OF 1", AND RISER HEIGHT OF 8" MAX. PROVIDE MIN OF 7'-6" CLEAR HEADROOM MEASURED VERTICALLY FROM NOSING OF THE TREAD.
12. NOTCHES IN SOLID LUMBER SHALL NOT EXCEED ONE SIXTH OF THE DEPTH OF THE MEMBER, NO LONGER THAN ONE THIRD OF THE DEPTH, AND SHALL NOT BE LOCATED IN THE MIDDLE THIRD OF THE SPAN. ALL NOTCHES SHALL CONFIRM TO R602.6, R802.7 OF THE MICHIGAN RESIDENTIAL CODE.
13. STUD SPACING IN BEARING WALLS SHALL BE IN ACCORDANCE W/ R602.3

DESIGNHAUS ARCHITECTURE EST 1998
3300 AUBURN RD. SUITE 300
AUBURN HILLS, MI 48326
T:248.601.4422 F:248.453.5854
WWW.DESIGNHAUS.COM
INFO@DESIGNHAUS.COM

---	---
---	---
---	---
---	---
---	---
---	---
---	---
---	---
---	---
---	---
---	---
---	---
---	---
---	---
---	---
Permit	26.02.13
90% OWNER REVIEW	25.12.16
ISSUANCE	DATE

Marten's Residence Addition

950 Van Hoosen Rd.
Rochester Hills, MI 48306

Floor Plans

25122

A1.1